# The variable valve timing mechanism for the Rover K16 engine
# Part 1: selection of the mechanism and the basis of the design

**P H Parker***
Rover Group Limited, Warwick, UK

**Abstract:** Variable valve timing has become an important feature of automotive engines as part of the search for a better compromise between performance, economy and emissions. This paper describes the Rover VVC system and has been written in two parts. The first part covers the initial feasibility study, the selection of the mechanism and the unique features evolved to suit the K16 engine. The second part covers the detailed mechanical layout, the development work undertaken and the performance obtained.

**Keywords:** variable valve timing, VVC

## NOTATION

| | |
|---|---|
| ABDC | after bottom dead centre (deg) |
| ATDC | after top dead centre (deg) |
| BDC | bottom dead centre |
| BTDC | before top dead centre (deg) |
| $e$ | eccentricity of the drive ring relative to the common centre of the input shaft and camshaft—also equal to the length of OP in Figs 3 and 8 |
| ER | eccentricity ratio of the mechanism |
| EVC | exhaust valve closing |
| EVO | exhaust valve opening |
| IVC | inlet valve closing |
| IVO | inlet valve opening |
| $r_p$ | radial distance of the centre of the drive pins from the input shaft centre-line (mm) |
| TDC | top dead centre |
| $\alpha$ | angle defining the direction of the eccentricity of the VVC mechanism housing from datum |
| $\gamma$ | control sleeve angle defined in Fig. 3 |
| $\delta$ | angle defined in Fig. 8 for use in the mechanism motion equations |
| $\varepsilon$ | direction of the mechanism eccentricity |
| $\eta$ | angle defined in Fig. 3 for use in the control sleeve geometrical equations |
| $\theta$ | angle of the cam drive pin from datum |
| $\mu$ | cam rotation at any instant from the point of maximum lift defined in Fig. 8 |
| $\varphi$ | angle of the input shaft drive pin from datum |

*The MS was received on 19 March 1999 and was accepted after revision for publication on 14 July 1999.*
** Corresponding address: 203 Bromsgrove Road, Redditch, Worcestershire B97 4SQ, UK.*

## 1 BACKGROUND

In response to the growing interest in variable valve timing, within the Rover Group and other vehicle manufacturers, a feasibility study to choose a suitable system for the K series four-cylinder engine was started during 1989. Appendix 1 defines what is understood by the term variable valve timing (VVT).

There were two different aspects to be considered in the study. The first was the effect on engine performance of possible variations in the valve parameters, namely phase, period and lift. The second was the actual potential of particular mechanisms to achieve the chosen variation. The study was 'mechanism led' in the sense that the objective was to identify a mechanism that could provide the estimated required range of adjustment but which was also practical to develop for production. The resulting engine performance, economy and emissions gains would then be explored as the mechanism was developed.

## 2 VARIABLE VALVE TIMING MECHANISM

### 2.1 Choice of mechanism

Examination of the literature reveals a wide variety of proposals and inventions for variable valve timing mechanisms. Review papers [1] to [3] describe various systems and also refer to appropriate detailed papers and patent specifications. The large array of proposals can be classified in various ways but the method given in reference [1] has been found convenient. An adapted simplified version of a diagram from that paper is shown in Fig. 1. The factors affecting the choice of mechanism were as follows:

1. The mechanism had to provide accurate valve motion at all times despite the high levels of positive and negative valve accelerations used in modern high-speed engines. This is currently achieved by designing the cam profiles to give specified variations of acceleration which are completely continuous over the whole 360° of camshaft rotation. The valve train components then have to be light enough and stiff enough to follow these accelerations without excessive loads, stresses or deflections. This means that any variable mechanism used also needs to be light and stiff in order to be able to achieve its intended valve timing variation without compromising the essential continuous control of valve acceleration.
2. The chosen mechanism had to be readily applicable to the 16-valve version of the Rover K series engine which is described in reference [4]. This is a four-cylinder engine with belt-driven twin overhead camshafts operating bucket tappets which act directly on the valves.
3. The performance benefits had to justify the manufacturing cost.
4. The magnitude of the engineering programme required to bring the chosen mechanism from concept to production had to be acceptable.

It soon became apparent that the many possibilities covered in Fig. 1 were not of equal merit when judged against the above factors and many could be discarded immediately. Others justified detailed consideration involving mathematical analysis and tentative design layout. The outcome was the selection of the cyclically varying angular velocity type of VVT for use on the Rover K series engine. These mechanisms have the advantage over simple phase change systems in that they vary cam period as well as phase.

### 2.2 Cyclically varying angular velocity systems

This class of mechanism provides variation of the valve opening period by varying the angular velocity of the cams during each revolution. Reduced opening periods compared with the base cams can be obtained by slowing the rotation of the cams relative to the crankshaft as each valve opening is approached, speeding the rotation during the valve opening periods and then slowing it again after the valves are shut. One complete camshaft revolution still takes the same time, i.e. the mean camshaft speed is exactly one half of crankshaft speed, but there is a systematic variation in the angular velocity of each cam during the revolution. Similarly increased opening periods relative to the base cams are

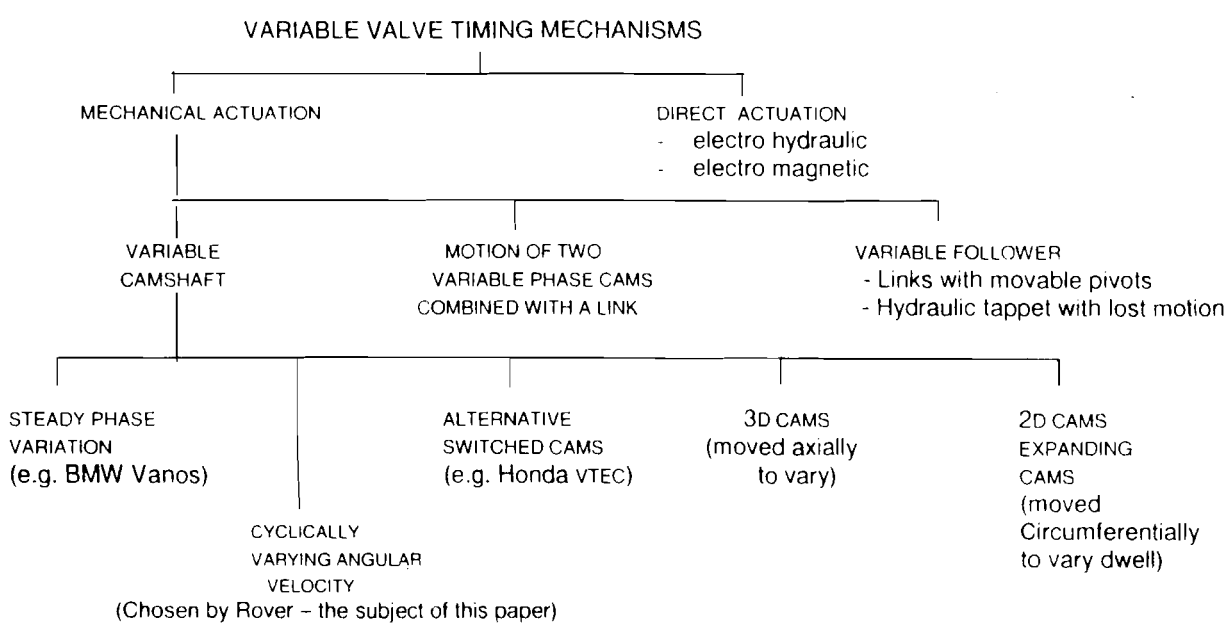


**Fig. 1** Classification of mechanisms

obtained by slowing the cams through the valve opening period and speeding up during the rest of the revolution.

There are various mechanisms for cyclically varying the angular velocity of the cams suggested in the literature. All depend on creating eccentricity between each cam and its drive. The Rover mechanism is based on that devised by Associated Engineering Limited (AE), which is described in references [5] and [6].

### 2.3 The Rover variable valve control (VVC) mechanism

Figure 2 shows the mechanism applied to one pair of cams of a four valve per cylinder engine. The input shaft and the camshaft are concentric while a slotted drive ring is mounted eccentrically to both, running in a separate bearing. Two drive blocks sliding in the slot transmit the drive from the input shaft to the camshaft via the eccentric drive ring. The magnitude of the drive ring eccentricity, combined with its direction relative to the line of valve motion, controls the change in valve period compared with that of the base cam. Adjustment of the magnitude of the eccentricity or its direction or both together provide the variable period characteristic.

A particular feature of the Rover mechanism is the eccentric sleeve control [7], the geometry of which is shown in Fig. 3. The drive ring is carried on a roller bearing mounted in a control sleeve, which is in turn mounted eccentrically to the common camshaft and input drive centres. Rotation of this control sleeve varies the position of the drive ring centre around a circle. As shown in Fig. 3, the design is proportioned so that the circle passes through the common camshaft and input drive centres. At one setting, therefore, the drive ring can be positioned concentrically with that common centre and then, for a steady input drive speed, there is no cyclic variation in cam angular velocity and the effective valve period equals that of the base cam. In addition to the profile of this base cam, the other variables available to the designer in meeting the range of valve timing required and achieving acceptable valve motion over that range can be seen in Fig. 3. They are the magnitude of OA, the direction of OA relative to datum, i.e. angle $\alpha$, and the amount of adjustment permitted between end stops, i.e. the positions of $P_1$ and $P_2$. Choosing an appropriate combination involved detailed study of many combinations. In order to do this computer programs have been developed to analyse the characteristics, i.e. the motion of the cam at any mechanism setting for steady input drive rotation, and link those characteristics to the Rover cam profile design program [8]. Appendix 2 outlines these calculations.

### 2.4 Mechanical layout

As explained above, the required valve timing variations are achieved by systematically varying the speed of cam rotation throughout the whole revolution. In order to phase correctly it is therefore necessary to provide one mechanism per valve, or, in the case of four-valve engines, per pair of identical valves in each cylinder. Most proposed four-cylinder applications of cyclically varying angular velocity VVT systems use one double eccentric unit situated between cylinders 1 and 2, serving those two cylinders and a second double unit situated

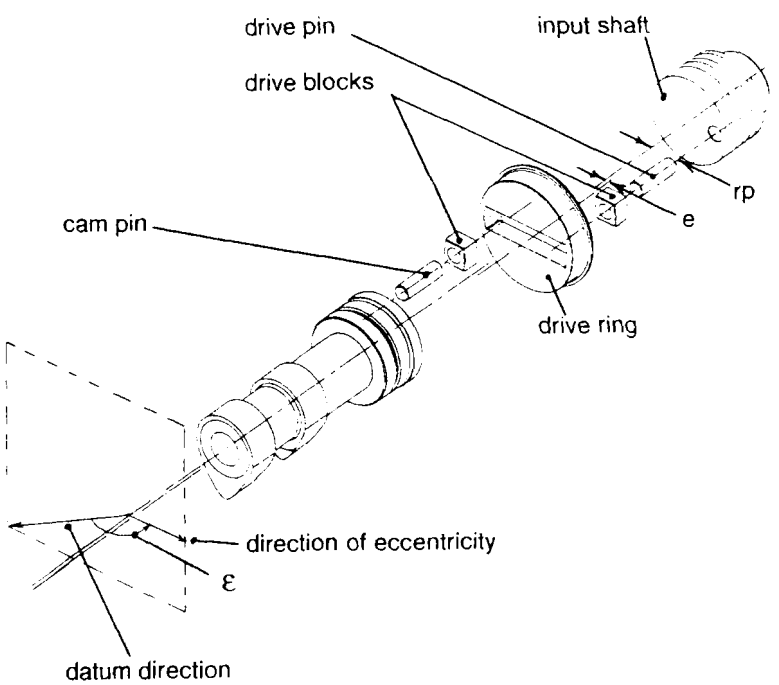


**Fig. 2** Mechanism applied to one set of cams

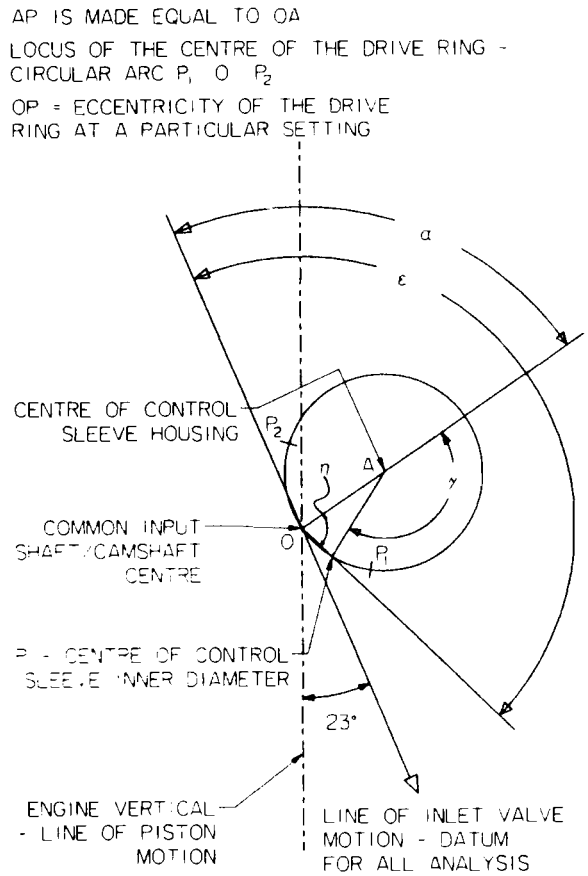


**Fig. 3** Geometry of eccentric control sleeve

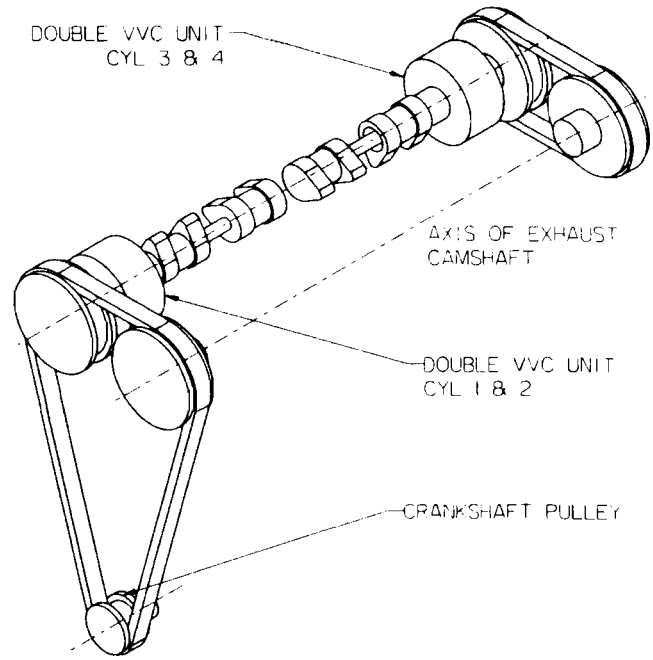


**Fig. 4** Relative location of VVC units and drives

between cylinders 3 and 4. The input drive shaft passes through holes in the eccentric drive rings and in each of the separate camshaft segments. The normal front camshaft drive pulley or sprocket is retained. Reference [5] describes the AE system applied to an experimental version of the Fiat 124 engine during the 1970s. However, that engine only had two valves per cylinder and a relatively wide valve angle. A modern four-valve layout, as might be expected, severely limits the axial length available for the mechanisms between cylinders and in addition the presence of the main cylinder head bolts significantly limits the diametrical space available. The eccentric units have to be designed with sufficient torque capacity to withstand the loads caused by peak cam acceleration at maximum engine speed and this controls the size required. Although it is very convenient to locate the eccentric units between the cylinders, a preliminary layout showed that a satisfactory design could not be found that did not increase the engine height and involve unacceptable modification to the proven K16 cylinder head and engine.

The logical alternative was to arrange for extensions from the camshafts for the inner cylinders to pass through the centre of the camshafts for the outer cylinders and mount a double eccentric unit at each end of the engine. The obvious disadvantage is that an input drive at half engine speed is required at the rear of the engine in addition to the normal one at the front. If the inlet valve timing is to be varied and not the exhaust, then the exhaust camshaft can conveniently act as a layshaft and drive the double eccentric unit for cylinders

**Table 1** Details of the VVC engine

| | |
|---|---|
| Bore | 80 mm |
| Stroke | 89.3 mm |
| Capacity | 1796 cm$^3$ |
| Compression ratio | 10.5:1 |
| Fuelling | Sequential MPI |
| Ignition | Direct using double-output coils |
| Engine management | Rover modular engine system (MEMS) |
| Rating (DOT88 195 EEC) | |
| Power | 107 kW at 7000 r/min |
| Torque | 174 N m at 4500 r/min |
| Fuel specification | 95 ULG |

**Table 2** Range of adjustment available from the VVC mechanism with the housing eccentricity ratio (OA $r_p$ in Fig. 8) = 0.27

| Setting | Maximum period | Concentric | Minimum period |
|---|---|---|---|
| Sleeve angle $\gamma$ (deg) | 140 | 180 | 225 |
| Angle of eccentricity $\varepsilon$ (deg) | 150 | 170 | 12.5 |
| Eccentricity ratio | 0.092 | 0 | 0.103 |
| Inlet valve period (deg) | 295 | 260 | 220 |
| IVC degrees ABDC | 78 | 57 | 40 |
| IVO degrees BTDC | 37 | 23 | 0 |

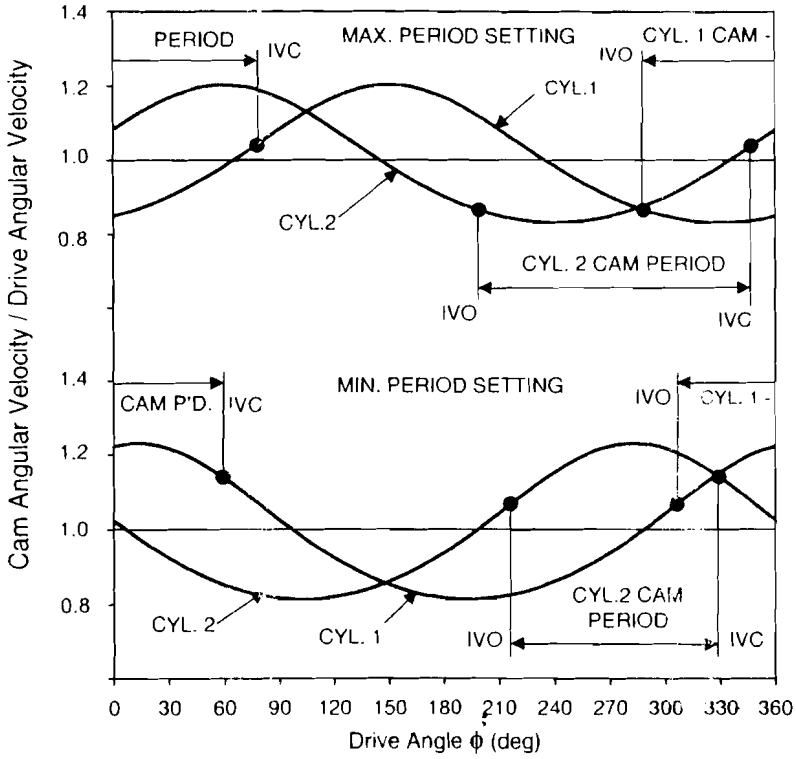


**Fig. 5** Cyclic velocity variation at maximum and minimum period settings

3 and 4 by means of a short toothed belt at the rear of the engine. This arrangement, shown diagrammatically in Fig. 4, was chosen as a suitable compromise between performance and manufacturing cost.

The novel arrangement of the mechanical components developed to fit the double VVC units into the confined spaces on the ends of the engine is described in Part 2 of this paper [9]. As the project progressed, a decision was taken to integrate the VVC system into a new 1.8 litre version of the Rover K16 engine, firstly for use in the MGF mid-engined sports car and then in a high-performance version of the Rover 200 saloon.

Both cars were to be on sale to customers in 1995. Table 1 outlines the engine specification. The values of the VVC mechanism variables were selected to produce the required engine characteristics. All details given in this paper specifically apply to that application. Table 2 shows the available range of continuous adjustment. Figure 5 shows the resulting cyclic variation in angular velocity during one camshaft revolution for the cams driven from the front VVC unit at the chosen maximum and minimum period settings. The positions of the actual valve events for cylinders 1 and 2 are identified in each case. This cyclic velocity variation, which is the same for both cylinders but with a phase difference in input drive angle of 90°, was calculated from the mechanism geometry as outlined in the section of Appendix 2 covering mechanism kinematics. Figure 6 shows the resulting inlet and exhaust valve lift diagrams for the VVC engine relative to each other and also for the corresponding base engine which does not have variable valve timing.

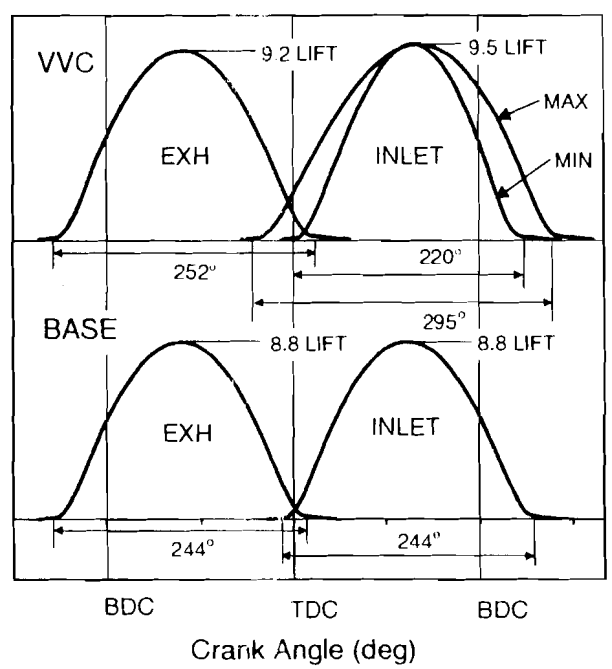


**Fig. 6** Valve lift diagrams for VVC and base engines

## 3 CONCLUSIONS

The use of variable valve timing on petrol engines is now receiving increased attention in the industry. This is to meet customer expectations for vehicles with improved performance coupled with reduced fuel consumption, but at the same time meeting the exhaust emission legislation.

Part 1 of this paper has presented the results of the feasibility study, discussed the basis of the concept selected and outlined the practical mechanical arrangement for the high-performance version of the Rover K16 engine with variable valve timing. Part 2 describes the mechanical layout, the development work necessary to bring to production and the performance obtained.

## REFERENCES


1 **Gray, C.** A review of variable engine valve timing. SAE paper 880386, 1988.
2 **Stone, R.** and **Kwan, E.** Variable valve actuation mechanisms and the potential for their application. SAE paper 890673, 1989.
3 **Dresner, T.** and **Barkan, P.** A review and classification of variable valve timing mechanisms. SAE paper 890674, 1989.
4 **Stone, R. D., Crabb, D., Richardson, R.** and **Draper, A.** The design and development of the Rover K16 engine. *Proc. Instn Mech. Engrs, Part D, Journal of Automobile Engineering*, 1990, **204**(D4), 221–236.
5 **Parker, D. A.** and **Kendrick, M.** A camshaft with variable lift–rotation characteristics: theoretical properties and application to the valve gear of a multicylinder piston engine. FISITA paper B-1-11, Paris, 1974.
6 Associated Engineering Limited. UK Pat. Specification 1311562, March 1973.
7 Rover Group Limited. UK Pat. Specification 2252130B, October 1990.
8 **Hollingworth, P.** and **Hodges, R. A.** The history and mathematical development of cam profile design in the Rover Group. In Autotech 1991, paper C427/1 (Mechanical Engineering Publications, London).
9 **Parker, P. H.** The variable valve timing mechanism for the Rover K16 engine. Part 2: application to the engine and performance obtained. *Proc. Instn Mech. Engrs, Part D, Journal of Automobile Engineering*, 2000, **214**(D2), 207–216.


## APPENDIX 1

### Definition of variable valve timing

Figure 7 shows a typical valve event diagram for a four-stroke spark ignition engine. When variable valve timing is used the angular position of some or all of these events can be varied. These changes are conveniently described by changes in cam phasing, i.e. the angular relationship of the opening point relative to engine TDC or BDC, and changes in period, i.e. the total angle between valve opening and valve closing. Some systems vary one only and others vary both. Some mechanisms also vary valve lift, i.e. the maximum linear movement of the valve from its seat.

## APPENDIX 2

### Eccentric sleeve geometry

Referring back to Fig. 3, the geometry of the eccentric control sleeve can be used to calculate the eccentricity of the mechanism and its direction. The independent variable for the mechanism is $\gamma$, since this angle is adjusted by the control system to vary valve period for different engine conditions. This angle $\gamma$ is measured clockwise from the direction of the housing eccentricity OA. When the sleeve angle is adjusted the resulting change in the mechanism eccentricity angle $\varepsilon$ is equal to the change in angle $\eta$. This angle is also measured clockwise from the direction OA. From triangle OAP,

$$\eta = \begin{cases} \gamma/2 & \text{when } \gamma < \pi \\ \gamma/2 + \pi & \text{when } \pi < \gamma < 2\pi \end{cases} \tag{1}$$

Direction of eccentricity from chosen datum:

$$\varepsilon = \alpha + \eta \tag{2}$$

Magnitude of eccentricity:

$$\mathrm{OP} = 2\mathrm{OA}\cos\eta$$

Eccentricity ratio:

$$\mathrm{ER} = \frac{\mathrm{OP}}{r_p} = \frac{2\mathrm{OA}\cos\eta}{r_p} \tag{3}$$

For any trial value of OA the direction and magnitude of the eccentricity for various sleeve positions, as defined by a range of values of angle $\gamma$, can be calculated from equations (1) to (3). It is then necessary to determine the kinematic behaviour of the VVC mechanism for these control sleeve settings. Retaining the same control sleeve setting as Fig. 3, Fig. 8 shows the mechanism geometry with the relative position of the cam profile at one point in the input drive shaft revolution defined by angle $\phi$.

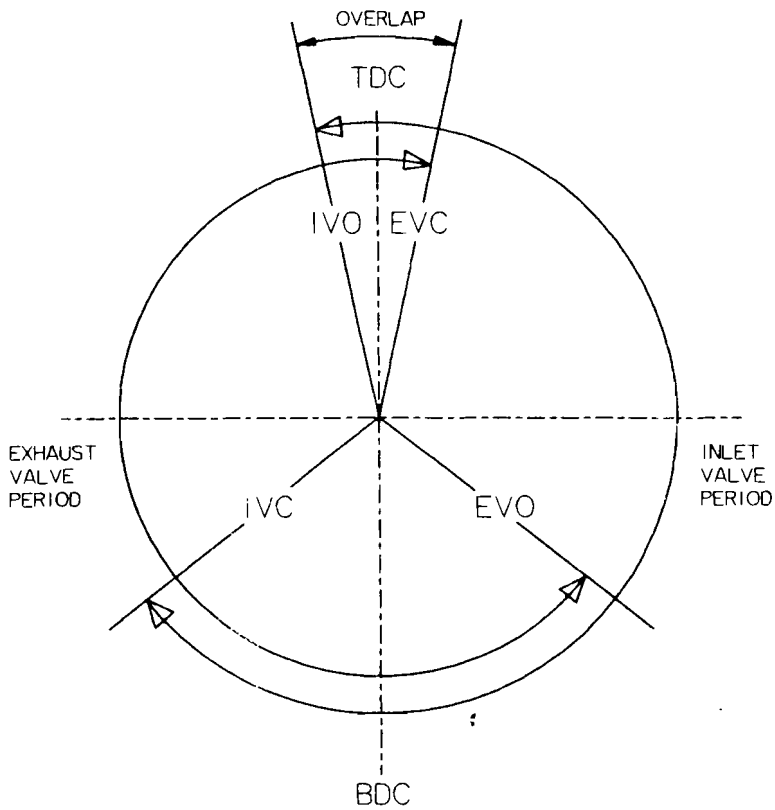


**Fig. 7** Typical valve event diagram for a four-stroke engine

## Mechanism geometry

For a particular control sleeve setting, the mechanism needs to be defined for each value of drive angle $\phi$ around a camshaft revolution. This involves calculating cam angle $\theta$ and also the relative positions of the drive blocks in the eccentric drive ring by evaluating PD and PF. From triangle OFD,

$$\theta - \phi + 2\delta = \pi \tag{4}$$

From triangle OFP,

$$\sin\delta = \frac{\mathrm{OP}\sin(\theta - \varepsilon)}{[\mathrm{OF}^2 + \mathrm{OP}^2 - 2\mathrm{OF}\,\mathrm{OP}\cos(\theta - \varepsilon)]^{1/2}}$$

and since $\mathrm{OF} = r_\mathrm{p}$ and ER is defined as $\mathrm{OP}/r_\mathrm{p}$,

$$\sin\delta = \frac{\mathrm{ER}\sin(\theta - \varepsilon)}{[1 + \mathrm{ER}^2 - 2\mathrm{ER}\cos(\theta - \varepsilon)]^{1/2}} \tag{5}$$

Similarly, from triangle ODP,

$$\sin\delta = \frac{\mathrm{ER}\sin(\varepsilon - \phi)}{[1 + \mathrm{ER}^2 - 2\mathrm{ER}\cos(\varepsilon - \phi)]^{1/2}} \tag{6}$$

Also, from triangle ODP,

$$\mathrm{PD} = [\mathrm{OD}^2 + \mathrm{OP}^2 - 2\mathrm{OD}\,\mathrm{OP}\cos(\varepsilon - \phi)]^{1/2}$$

Hence,

$$\frac{\mathrm{PD}}{r_\mathrm{p}} = [1 + \mathrm{ER}^2 - 2\mathrm{ER}\cos(\varepsilon - \phi)]^{1/2} \tag{7}$$

Since triangle OFD is isosceles,

$$\mathrm{FD} = 2r_\mathrm{p}\sin\left(\frac{\theta - \phi}{2}\right)$$

and so

$$\frac{\mathrm{PF}}{r_\mathrm{p}} = 2\sin\left(\frac{\theta - \phi}{2}\right) - \frac{\mathrm{PD}}{r_\mathrm{p}} \tag{8}$$

Equations (5) and (6) are alternative expressions for $\sin\delta$ and hence $\delta$, the one in terms of $\theta$, $\varepsilon$ and ER and the other in terms of $\phi$, $\varepsilon$ and ER. The choice depends on the calculation required as shown in the next two sections.

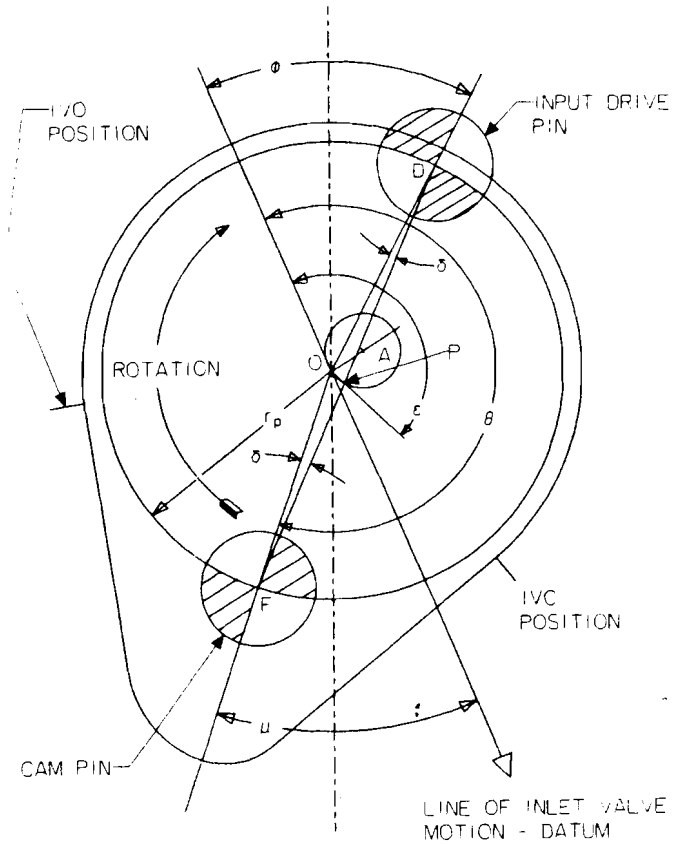


**Fig. 8** Mechanism geometry at one position during a camshaft revolution

## Variation in valve events

When selecting appropriate mechanism settings, i.e. OA and $\alpha$, and the valve event timings for the base cam, the designer needs to explore the variation in valve opening and valve closing over a range of control sleeve adjustment for trial combinations. It can be seen from Fig. 8 that maximum valve lift always occurs when $\theta = \pi$ since the peak of the cam profile is arranged to be in line with the cam drive pin. The cam angle difference from maximum lift to any other valve event of interest, e.g. valve opening or valve closing, is known from the shape of the cam profile. Therefore the corresponding value of $\theta$ is also known. The engine crankshaft is coupled to the input drive shaft not directly to the cams, so that the engine timing of a valve event depends on the value of $\phi$ at which the event occurs. When the mechanism is concentric, angle $\delta$ is zero and so from equation (4) $\theta - \phi = \pi$. Since this difference between $\theta$ and $\phi$ is constant, the valve events are spaced as specified by the base cam profile. For any other control sleeve setting, i.e. a chosen value of $\gamma$, the corresponding values of $\varepsilon$ and ER are calculated as given in the section on eccentric sleeve geometry above. In this case equation (5) is the required equation to evaluate angle $\delta$ for each valve event. The difference in the timing of an event from the corresponding value when the mechanism is concentric is $2\delta$ from equation (4). An example of results from this calculation is given in Table 2 for the two extreme settings of the production mechanism.

## Mechanism kinematics

In a given application the mechanism settings, the valve event timings for the base cam and the desired range of adjustment are determined by studying results from the calculations outlined in the previous section. In order to design the VVC units, the shaft angular positions, velocities and accelerations and the linear positions, velocities and accelerations of the drive blocks relative to the drive ring slots are required. The evaluation for various control sleeve settings, e.g. at the minimum and maximum period positions, is carried out all round one input drive revolution, i.e. at intervals of $\phi$ from 0 to $2\pi$.

The corresponding values for $\varepsilon$ and ER are calculated for each control sleeve setting as before using the equations given in the section on eccentric sleeve geometry. In this case $\phi$ is the independent variable so equation (6) is used to calculate the angle $\delta$. The value for the cam angle $\theta$ follows from equation (4). The relative drive block positions, PD and PF, are evaluated from equations (7) and (8). The angular velocity of the

 

cam is obtained by differentiating with respect to time. From equation (4),

$$\dot{\theta} = \dot{\phi}\left(1 - 2\frac{\mathrm{d}\delta}{\mathrm{d}\phi}\right) \tag{9}$$

From equation (6),

$$\frac{\mathrm{d}\delta}{\mathrm{d}\phi} = \frac{-\mathrm{ER}\cos(\varepsilon - \phi)f(\phi) + \mathrm{ER}^2\sin^2(\varepsilon - \phi)}{[f(\phi)]^{3/2}(1 - \sin^2\delta)^{1/2}} \tag{10}$$

where $f(\phi)$ is defined as

$$f(\phi) = 1 + \mathrm{ER}^2 - 2\mathrm{ER}\cos(\varepsilon - \phi) \tag{11}$$

$f(\phi)$ is used in equation (10) to avoid writing a very lengthy expression arising from differentiating the fairly complex arcsine function.

The input drive block velocity relative to the slot is obtained by differentiating equation (7):

$$\frac{\dot{\mathrm{PD}}}{r_{\mathrm{p}}\dot{\phi}} = -\frac{\mathrm{ER}\sin(\varepsilon - \phi)}{[f(\theta)]^{1/2}} \tag{12}$$

The camshaft drive block velocity relative to the slot is obtained by differentiating equation (8):

$$\frac{\dot{\mathrm{PF}}}{r_{\mathrm{p}}\dot{\phi}} = \left[\cos\left(\frac{\theta - \phi}{2}\right)\right]\left(\frac{\dot{\theta}}{\dot{\phi}} - 1\right) - \frac{\dot{\mathrm{PD}}}{r_{\mathrm{p}}\dot{\phi}} \tag{13}$$

The corresponding accelerations are obtained by differentiating again with respect to time, but remembering that for design the input shaft angular velocity $\dot{\phi}$ is assumed constant and equal to half of the engine speed. The expressions are straightforward, but due to the number of terms become lengthy to write. They are not therefore included in this appendix.

## Cam profile design

A cam profile with a selected period and acceleration characteristic is specified using the proven design method [8], which is used for all Rover cams. At the concentric setting therefore the valve motion is completely defined. The valve motions at other settings, usually minimum and maximum periods, also have to be studied. Constant angular velocity of the input drive is also assumed in this calculation and for one degree intervals of drive angle $\phi$ the corresponding values of cam angle $\theta$ are found from equations (4) and (6) as before. For each value of $\theta$ the cam profile design files are interpolated to give valve lift and also the valve velocity and acceleration generated by the cam profile. These values of velocity and acceleration are then combined with those due to the cyclically varying angular velocity and acceleration generated by the eccentric mechanism, which are calculated as described in the previous section on mechanism kinematics.

In order to optimize for desired characteristics, a series of base cam profiles is studied over the intended range of mechanism adjustment. The data produced by the analysis are then used as input to computer programs used for mechanical design, e.g. valve gear dynamics, bearing loads, component stressing and determination of drive belt loads.